REVISIONS			
REV	DESCRIPTION	DATE	APPROVED
1	PROTOTYPE RELEASE		
2	PROTOTYPE RELEASE		
3	PROTOTYPE RELEASE		
4	PROTOTYPE RELEASE		
A	PRODUCTION RELEASE PER EDR 42-528		
B	REVISED PER ECO 3035	01-17-95	AKS
C	REVISED PER ECO 3063	03-29-95	AKS
D	REVISED PER ECO 3088	5-12-95	AKS

SHT 1 COVER SHEET

SHT 2 INPUT LEVEL LED'S AND POWER CAPS

SHT 3 INPUT / OUTPUT LEVEL CONTROLS

SHT 4 DISPLAY, BUTTONS / LEDS

SHT 5 MUTE, MIC / LINE CONTROLS

2. ALL CAPACITOR VALUES ARE IN MICROFARADS, 16V MINIMUM.
1. ALL RESISTOR VALUES ARE IN OHMS, 1/10W 5%.

NOTES - UNLESS SPECIFIED OTHERWISE:

COVER SHEET

ENSONIQ Corp
155 GREAT VALLEY PKWY, MALVERN PA 19355

APPROVALS	DATE	PCB SCHEMATIC KEYPAD / DISPLAY DP-4+		
DWN BY: BAVL	05-02-94			
CHKD BY:		SIZE B	DWG. NO. 4010024101	REV D
APPD BY:				
USED ON: DP-4+		SCALE —	SHEET 1 OF 5	

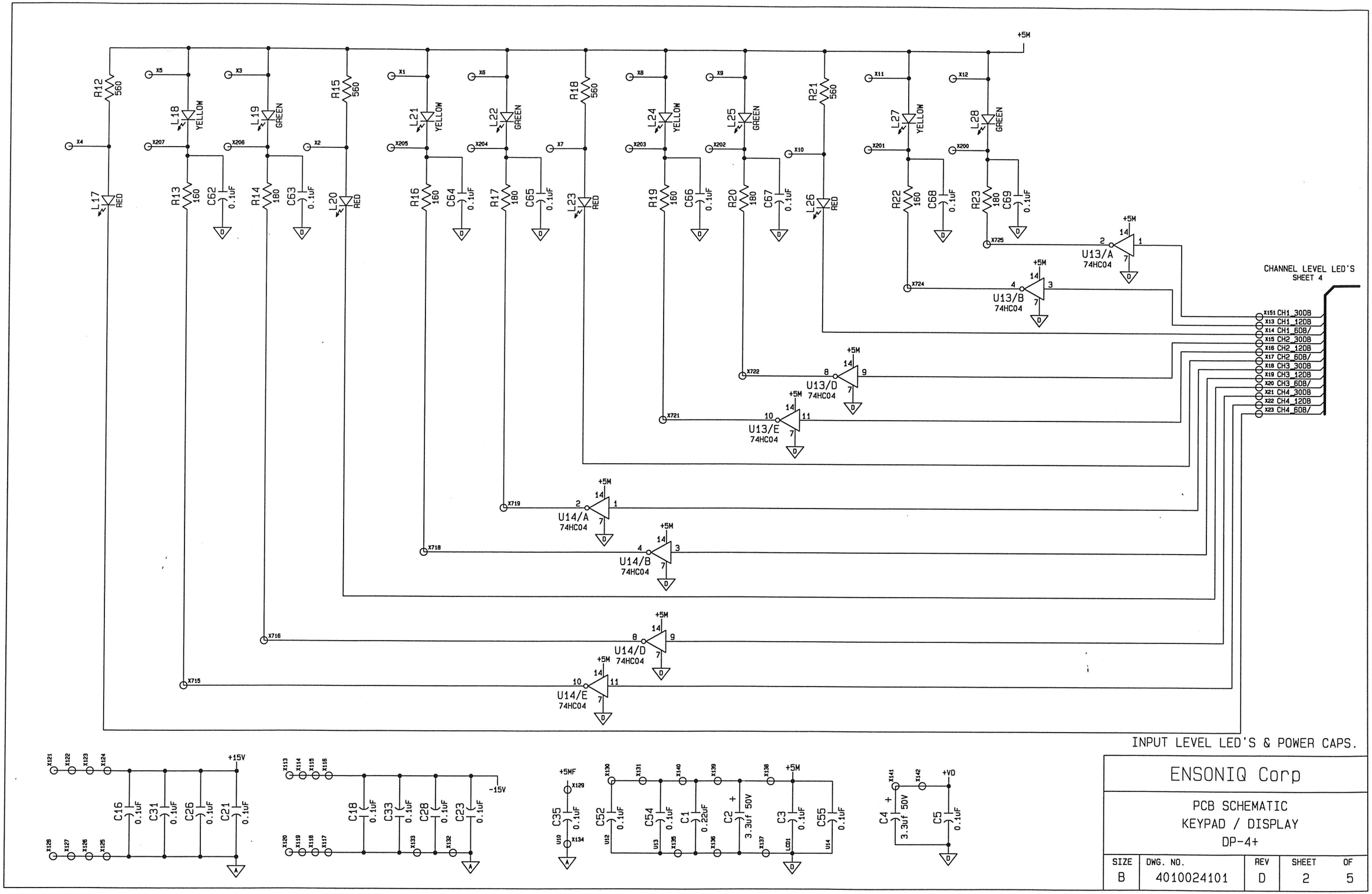

ENSONIQ Corp				
PCB SCHEMATIC KEYPAD / DISPLAY DP-4+				
SIZE	DWG. NO.	REV	SHEET	OF
B	4010024101	D	2	5

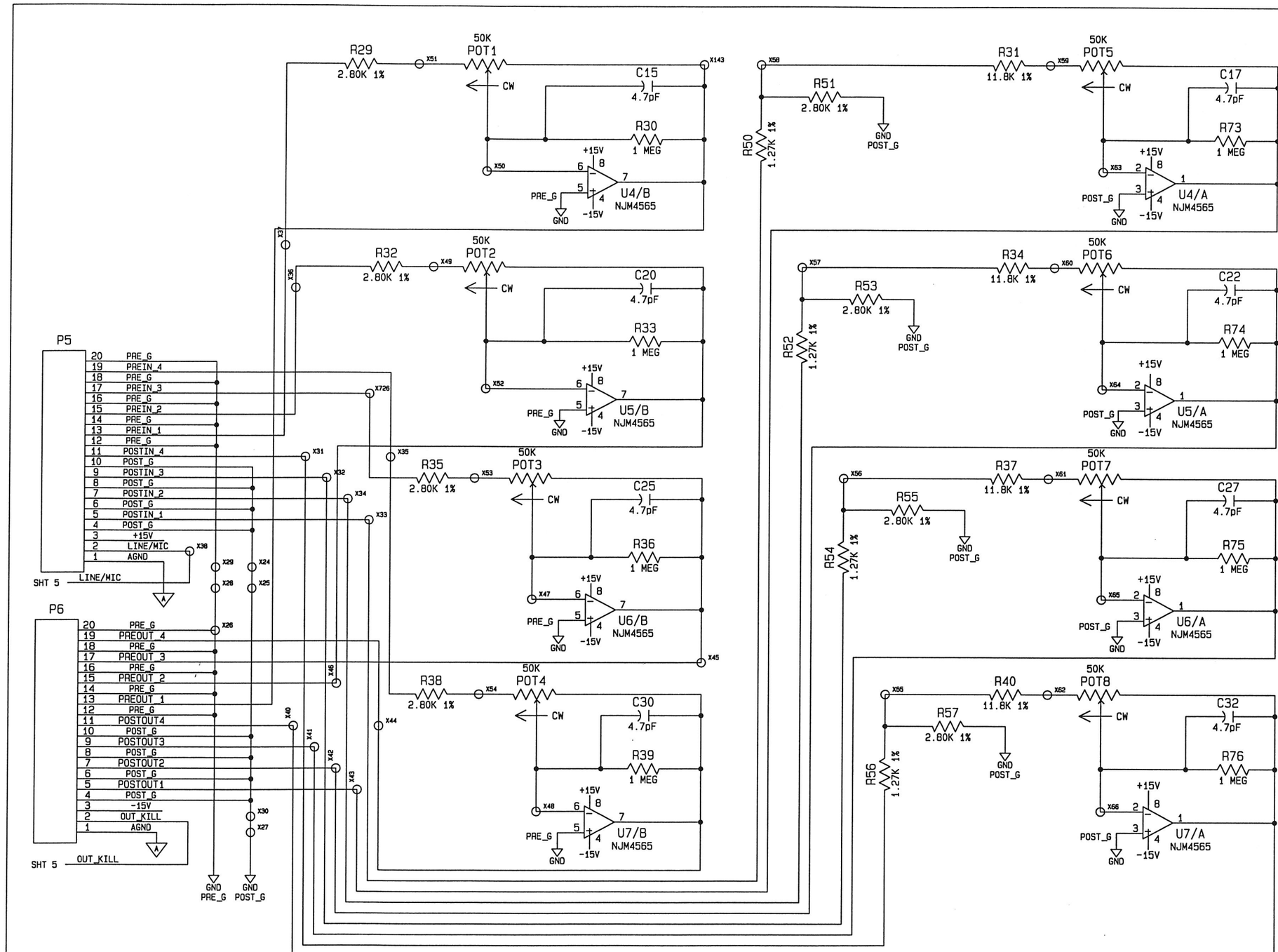

INPUT/OUTPUT LEVEL CONTROLS

ENSONIQ Corp

PCB SCHEMATIC
KEYPAD / DISPLAY
DP-4+

SIZE	DWG. NO.	REV	SHEET	OF
B	4010024101	D	3	5

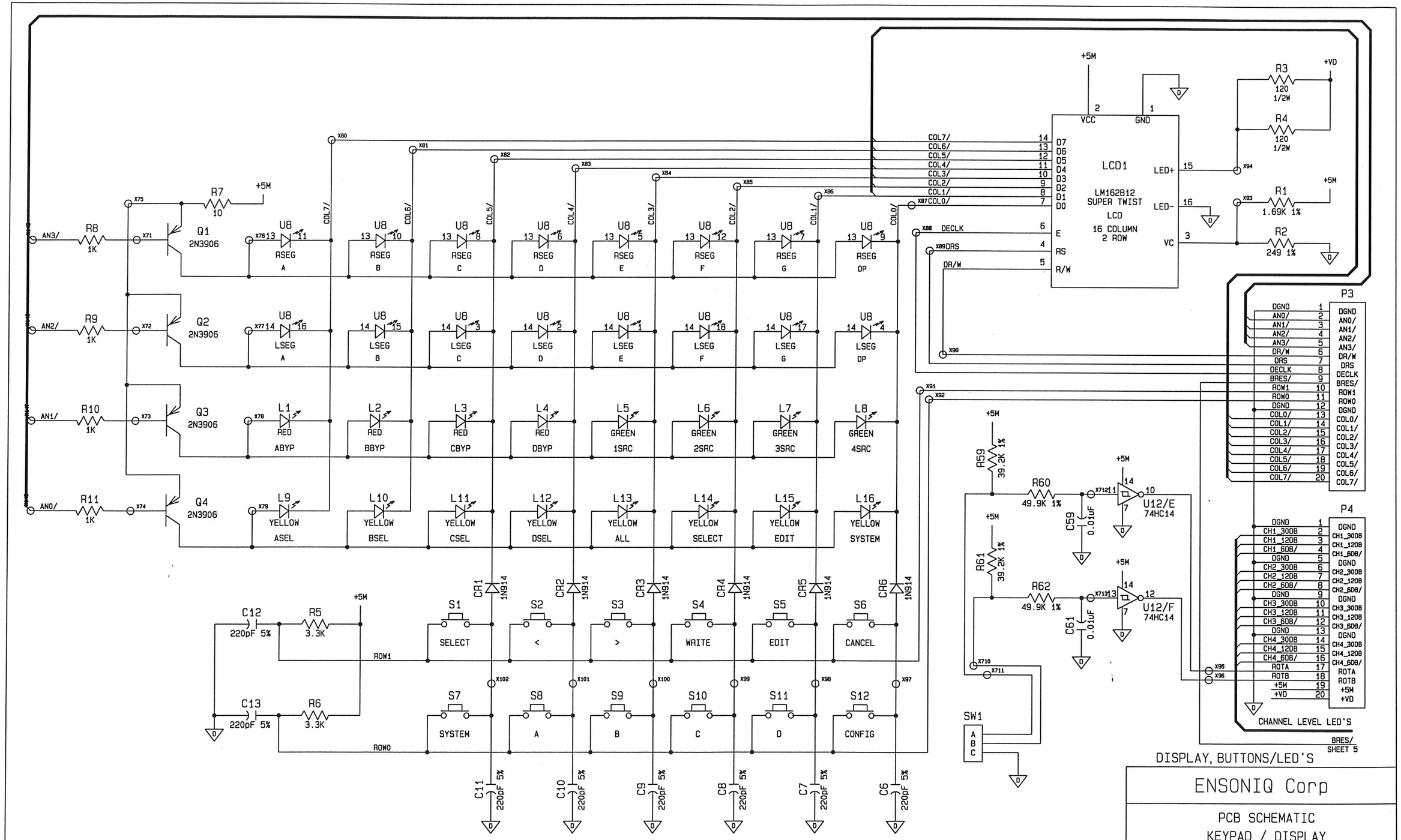

DISPLAY, BUTTONS/LED'S

ENSONIQ Corp

PCB SCHEMATIC
KEYPAD / DISPLAY
DP-4+

SIZE	DWG. NO.	REV	SHEET	OF
B	4010024101	D	4	5

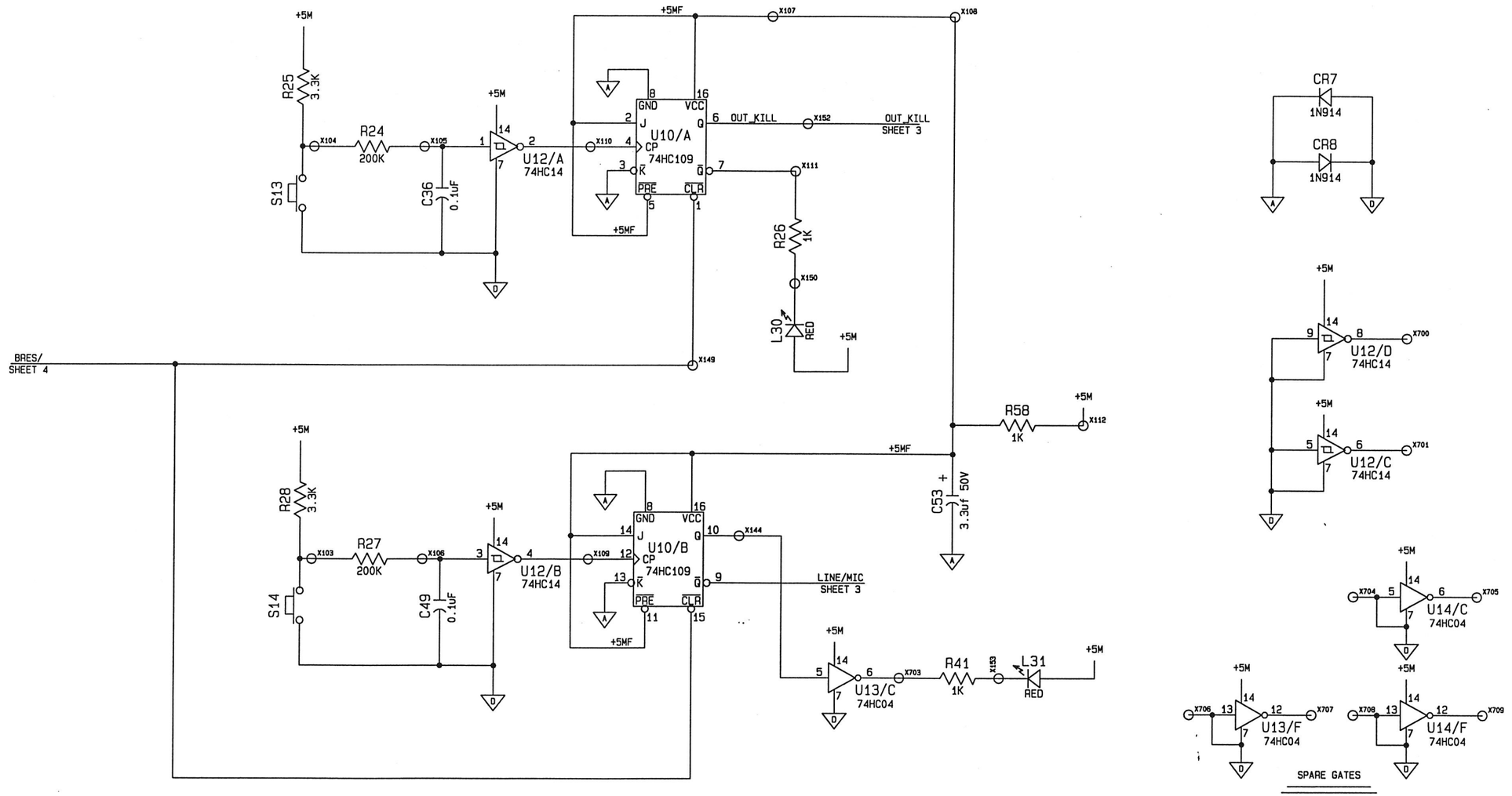

MUTE, MIC/LINE CONTROLS

ENSONIQ Corp

PCB SCHEMATIC
KEYPAD / DISPLAY
DP-4+

SIZE	DWG. NO.	REV	SHEET	OF
B	4010024101	D	5	5